LOONEY BIRD HANDS RETRO-FIT

Note:

To permit packaging, the Guide Shaft Rear Mounts (2) have been assembled in the reverse position. Both top and bottom mounts must be disassembled and put together in such a way that the ends of the rear mounts extend outward from the Bird Frame Upright approximately 1½".

See Retro-Fit instructions for the setting of the Plastic Guide Block with the Pivot Block w/ Act. Lever.

Parts List

Looney Bird Hands Retro-Fit

Description	Part #	Quantity
Rear Cylinder Mount	M04040	1
Rear Cylinder Mount Support	M04060	1
Cylinder	M04065	1
Guide Shaft Mount	M04090	2
Guide Shaft Rear Mount	M04110	2
Plastic Guide Block	M04140	1
Steel Guide Rod	M04150	1
Letter Mount Spacer	M04175	1
Pivot Block w/ Act. Lever	M18535	1
Plastic Page w/Hands	AG31-3815	1
Plastic Sheet	ATT 301	1
L-Bracket	21-035-005	1
1/4" x 3/8" x #10-24 Thd. Shoulder Bolt	28-016-004	1
1/8" MPT x .125 Barb	85-010-012	2
3M Super Whether Strip Adhesive	95-010-030	1
25' Length Pre-Assembled Air Hose		2
1/4"-28 x 2" Bolts		2
1/4"-20 x 4 1/2" Bolts		4
1/4"-20 x 2" Bolts		2
1/4"-20 x 1" Bolts		3
1/4" Flat Washers		12
1/4" Lock Washers		10
1/4"-20 Nuts		7
#6-32 x 1" Screws		2
#6 Flat Washers		2
#6 Lock Washers		2
#10-24 Nut		1
1/4" x 1# Lag Bolts		2

Looney Bird's Hands Retro-Fit

Step 1) (See Drawing 1A) Attach the two Rear Cylinder Mount Pieces (B) to the lower Carrier box (A), using the two 1/4"-28 x 2" Bolts, two 1/4" Lock Washers and two 1/4" Washers. The three hole Mount Piece (B) goes on the top of the box with the counter-bored hole facing up. Do not tighten the mounts into place.

Step 2) Remove the two front screws from the lower Pillow Block Bearing. Attach the pre-assembled Actuation Plate and Pivot Block (C), using two #6-32 x 1" screws (D), two #6 Lock Washers and two #6 Washers.

Step 3) Attach the Guide Shaft (E), Plastic Guide Block (F) and the three piece, upper and lower Rod Mounts, using four 1/4"-20 x 4 1/2" Bolts, four 1/4" Lock Washers, four 1/4" Washers and four 1/4"-20 Nuts. Note the assembly, and position of the upper Rod Mount between the cap (G) and the Brace (H), and tighten the upper mount into place. Leave the lower mount snug, but don't tighten it into place.

Step 4) Attach the Plastic Page (I) and 1" aluminum spacer (N), to the Plastic Guide Block (F) using, two 1/4"-20 x 2" Bolts, two 1/4" Lock Washers and two 1/4" Washers.

Step 5) Align the slot in the Plastic Guide Block (F) with the Actuation Plate (C). Allow the plate to support the Guide Block (F). Slide up the lower three piece Rod Mount to hold up the Plastic Guide Block (F). Center the Actuation Plate (C) inside the slot in the Guide Block (F), tighten the lower three piece Rod Mount into place. Make sure the Actuation Plate (C) aligns with the center of the slot.

Step 6) Attach the Cylinder's rear mount to the mount plate, using the 1/4" x 3/8" x #10-24 thread Shoulder Bolt (J). Attach a #10-24 (K) nut under the plate, to act as a Jam Nut.

Step 7) The Pin to Pin on the cylinder is approximately 7 1/8", with the cylinder open, adjust the cylinder's Pin to Pin. Do not tighten the Cylinder's Jam Nut. Attach the front mount rod end of the cylinder to the Actuation Plate, using a 1/4"-20 x 1" Bolt, two 1/4" Washers (L) and one 1/4"-20 Nut. Use one Washer (L) as a spacer between the Actuation Plate (C) and the Rod End. Attach the 1/4"-20 Nut under the Actuation Plate (C) to act as a Jam Nut. Loosen the rear mount plates on the Carrier. With the Cylinder fully open, adjust the Actuation Plate (C) as far into the Plastic Block's slot as possible, allow a small amount of clearance. With the Cylinder fully closed, the Actuation Plate (C) should clear the Plastic Block (F). When the rear mounts have been adjusted, square them with the carrier and tighten them down. Check to see the Head Turn cylinder (M) does not touch the mount plates, when static or during the movement. After all adjustments are met, tighten the Cylinder's Jam Nut.

Looney Bird's Hands Retro-Fit

Step 8) Disconnect the air to the Props Valve Bank. Remove the two plugs from Valve #6, the only open valve on the Props Valve Bank.

Step 9) Install the two, 1/8" MPT. x .125 Barbs (Part #85-010-012) supplied, into the valve, use Lock-Tite.

Step 10) Attach the two .125 air lines, with the Flow Controls attached, to the valve. The Flow Controls attach at the valve. Label the top air lines, A for top port and B for bottom port.

Step 11) Run the air lines under the platform, to the hole that Looney Bird's Plumbing Harness goes through. Cable Tie the two new lines to the Plumbing Harness, and route them to the cylinder. Cut off and save any excess line. Attach the line labeled A to the rear of the cylinder, and the line labeled B to the front of the cylinder. Re-apply air to the Props Valve Bank, and test the movement for proper operation.

Step 12) (See Drawing 2A) Instal the plastic sheet supplied, inside of the Drum. The sheet attaches 14" from the cut out and approximately 1" down from the top of the Drum. Attach the plastic sheet using 3M glue. Place the Drum back over the Looney Bird mechanism. Attach the L-Bracket to the barrel using two, 1/4"-20 x 1" bolts, two 1/4" washers, two 1/4" lock washers and two 1/4-20 nuts. (Note assembly on the drawing) Paint the heads of the bolts blue using touch up paint. Hold the barrel out from the birds beak and lag bolt the barrel to the the floor using two 1/4" x 1" lag bolts.

Step 13) Adjust the Flow Controls to open and close the cylinder as quickly as possible, without excessive noise. (The cylinder is closed in the static position)

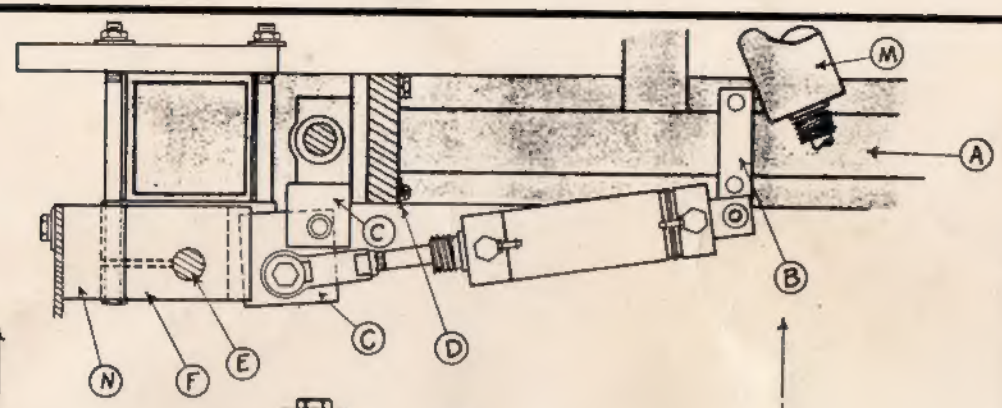

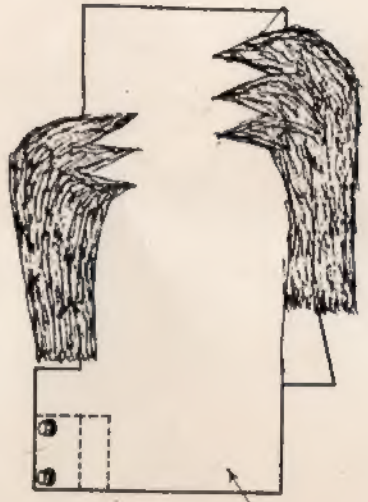

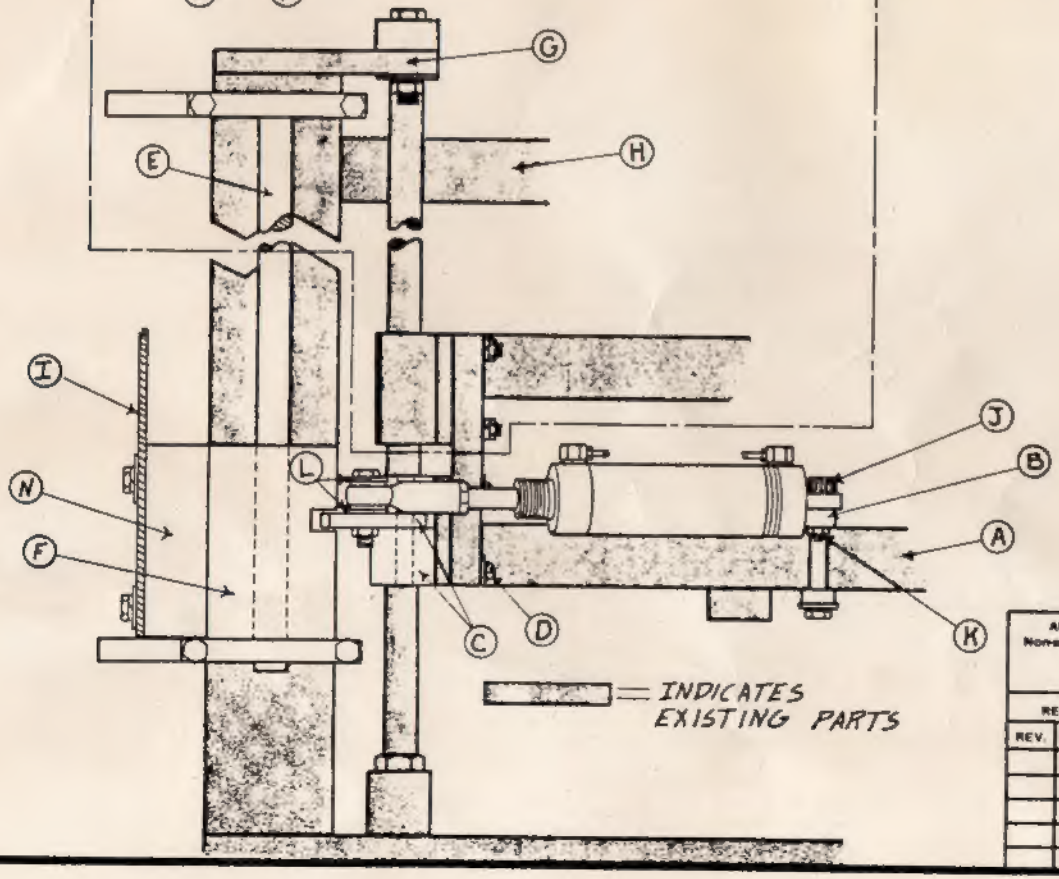

= INDICATES EXISTING PARTS

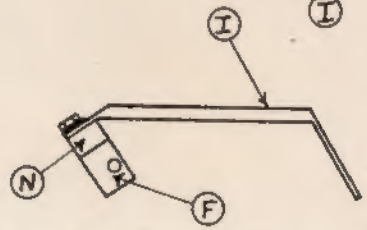

STOCK	MAT'L.

All tol. are Non-accumulative

R. - D. APPROVAL DATE

PRODUCTION APP. DATE

Q. C. APPROVAL DATE

DEBURR AND BREAK ALL SHARP CORNERS .010

REVISIONS		
REV.	DATE	BY

CREATIVE ENGINEERING

Property of Creative Engineering, Inc. Reproduction W/O Authorization is strictly prohibited

SCALE:

DATE: 11·16·83

DRAWN BY: BD

CHK'D. BY:

ITEM: LOONEY BIRD HANDS RETRO-FIT

MAT'L:

UNTOLERANCED DIM.
FRACT'L. .020
DECIMAL .XX · .010 .XXX · .005

DRAWING NUMBER 1A

STOCK	MAT'L.

APPROX CLEAR PLASTIC LOCATION IN RUB AREA OF HAND'S.

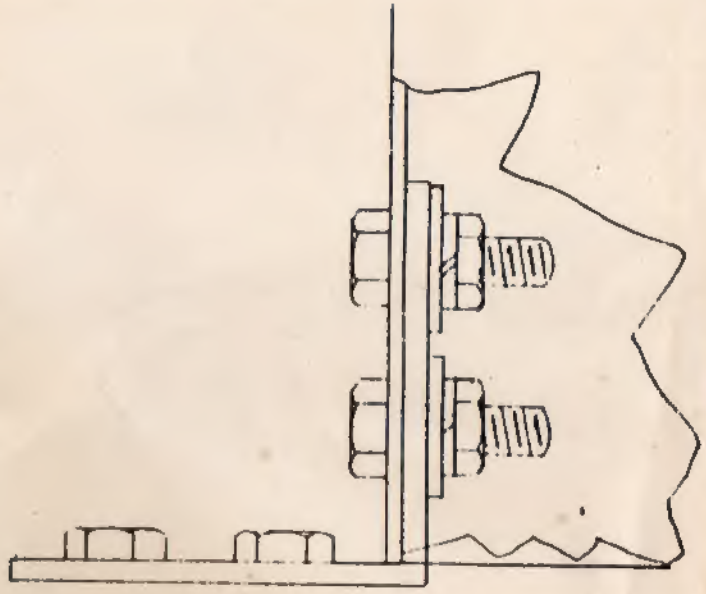

All tol. are Non-accumulative	R. + D. APPROVAL DATE	CREATIVE ENGINEERING INC	Property of Creative Engineering, Inc. Reproduction W/O Authorization is strictly prohibited
REVISIONS	PRODUCTION APP. DATE		
REV. DATE BY	Q. C. APPROVAL DATE	DEBURR AND BREAK ALL SHARP CORNERS ± .010	SCALE:
			DATE: 10·13·83
			DRAWN BY
			CHK'D. BY

ITEM: LOONEY BIRD'S DRUM

MAT'L:

UNTOLERANCED DIM.
FRACT'L. ± 020
DECIMAL .xx ± .010 .xxx ± .005

DRAWING NUMBER 2A

THE ROCK-AFIRE EXPLOSION: LOONEY BIRD HANDS RETROFIT GUIDE

Date of Origin: 1983
Archived: 10-11-23
Submission by ChuckEZone
Version 1.0

The documents contained herein are for educational use only. Please do not replicate, redistribute, or make any unauthorized printings. All intellectual property including characters, artwork, photography, and slogans are trademark and/or copyright their respective owners.